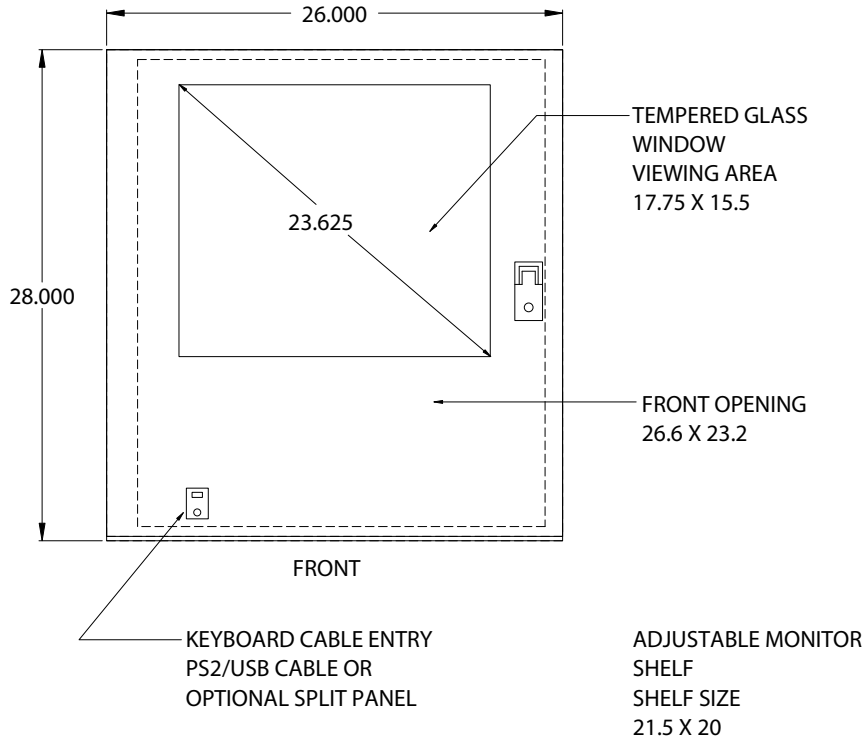

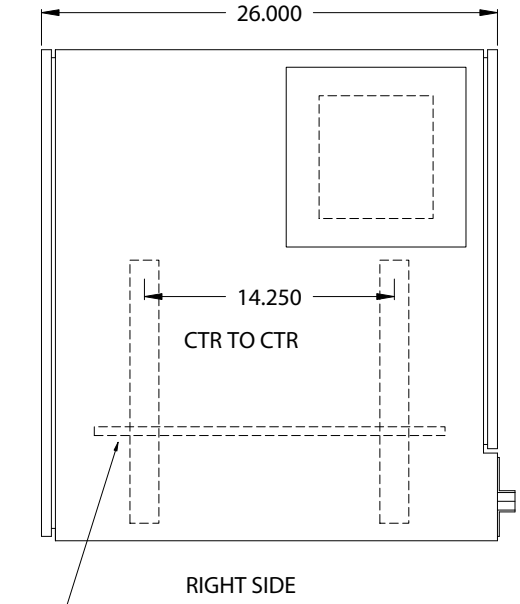

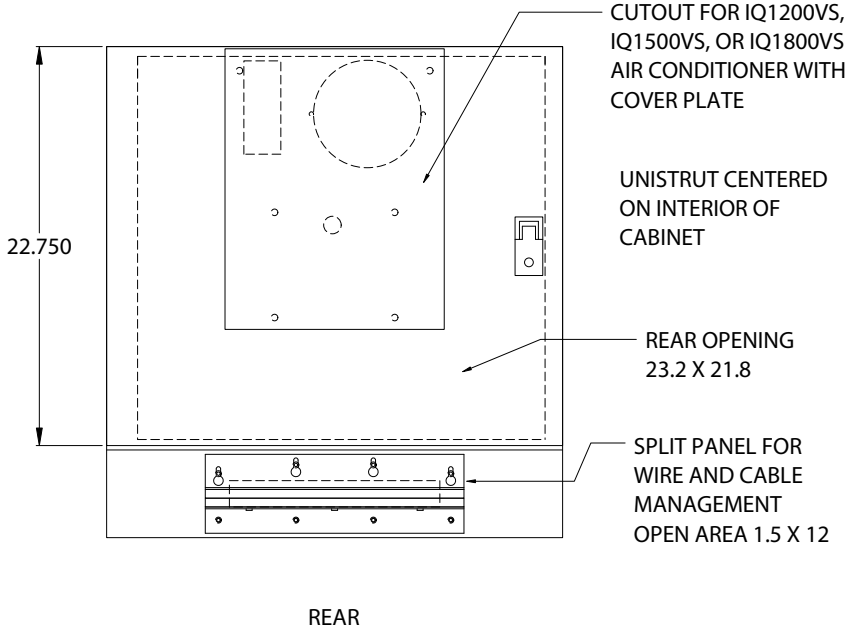

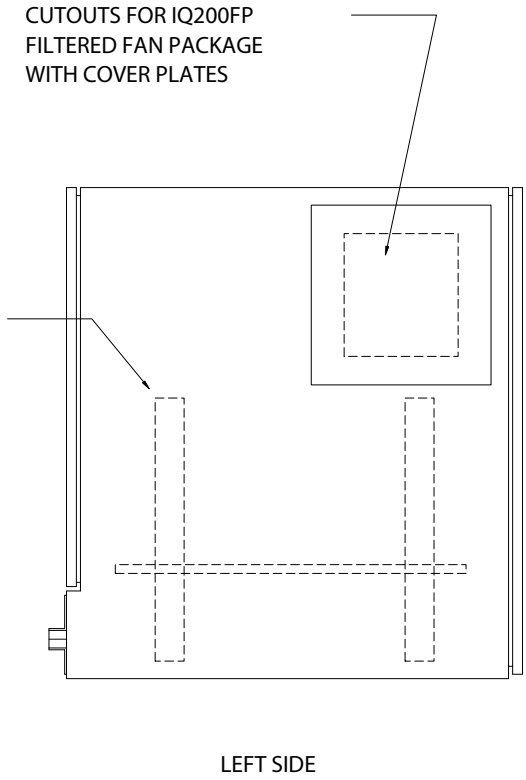

ICE QUBE, INC.
SPEC DRAWING
IQ28D ENCLOSURE
DWG # IQ210301