PROPRIETARY DRAWING
THIS DRAWING IS THE PROPERTY OF ICE QUBE, INC. AND IS NOT TO BE DUPLICATED OR ALTERED WITHOUT AUTHORIZATION OF ICE QUBE, INC.

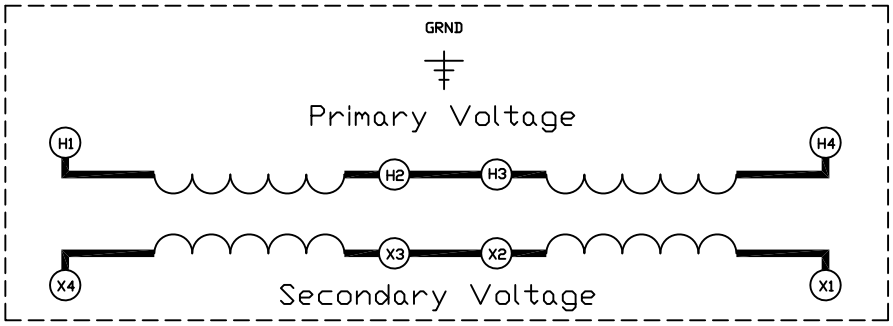

Optional
For 480 VAC
Models Only

WIRING SCHEMATIC

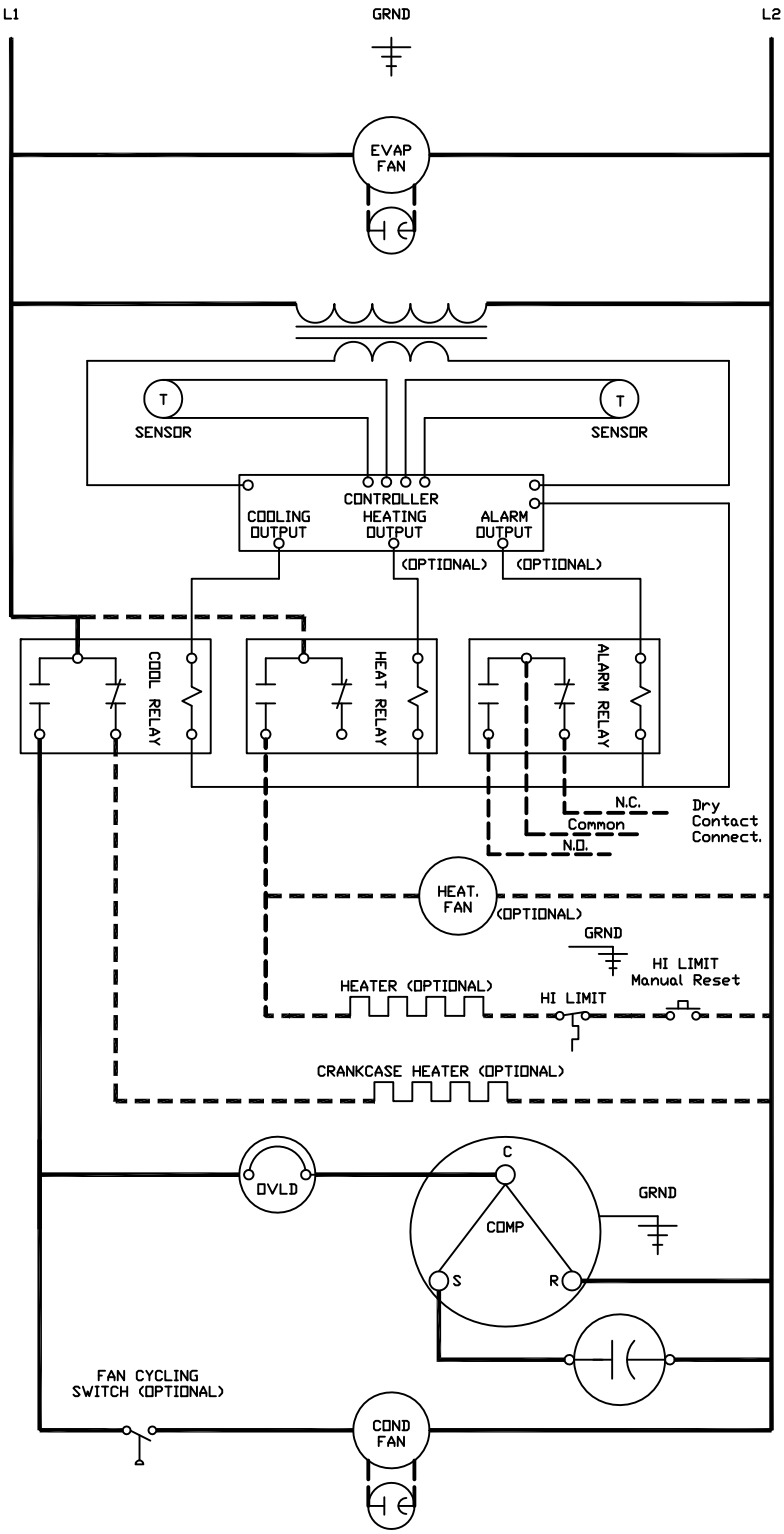

Legend

- Line Voltage
- Low Voltage
- Optional
- Compressor Overload
- Run Capacitor
- T Temperature Sensor
- Wire Ground
- Open on rise thermostat
- Heater
- Transformer
- C Common
- S Start
- R Run

REVISIONS			
REV	DESCRIPTION	DATE	CHECKED
1	Alrm output, heat, fan cycling	4/12/2007	SJP
2	Change cool relay contacts	6/29/09	SJP

UNLESS OTHERWISE SPECIFIED
TOLERANCES:
.X ± .060" .XX ± .030"
.XXX ± .015"
FRACT ± 1/16" ANG ± 1/2°

Ice Qube
INDUSTRIAL COOLING EQUIPMENT
141 WILSON AVENUE
GREENSBURG, PA 15601
724-837-2204 * 1-888-867-8234
FAX 724-837-3386

PART NAME
SCHEMATIC X

DATE	DWG NO	REV
02-20-08	IQ200208-A	2
SHEET 2 OF 2		