IQ800FP-H SPEC DRAWING
860/800 CFM FREE AIR @ 120/110 VAC 60/50 HZ
860/800 CFM FREE AIR @ 240/220 VAC 60/50 HZ
MAXIMUM AMPS : 0.70/0.98 @ 120/110 VAC 60/50 HZ
MAXIMUM AMPS : 0.35/0.48 @ 240/220 VAC 60/50 HZ
MAXIMUM OPERATING TEMPERATURE : 158°F

INTAKE

FRONT

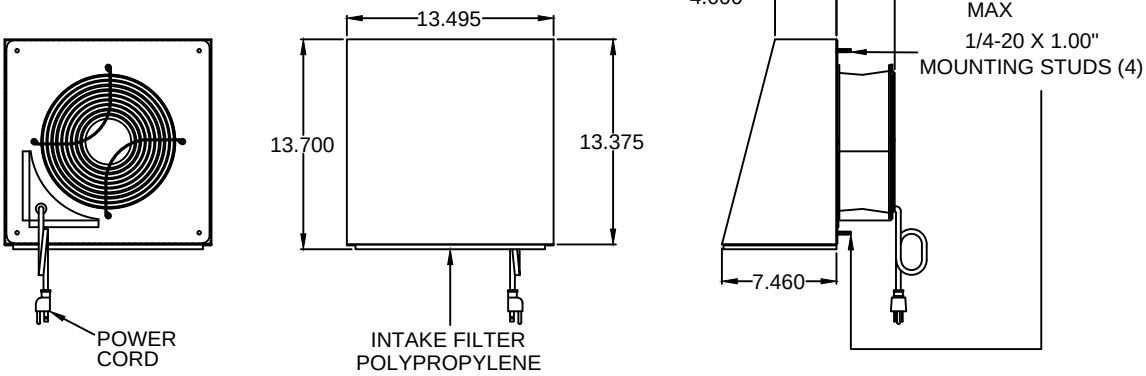

EXHAUST

FRONT

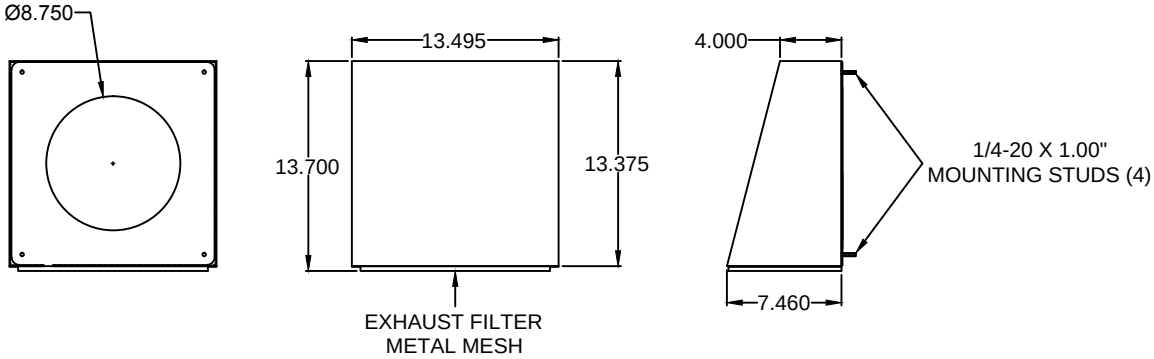

IQ800FP-H
INTAKE AND EXHAUST
CUTOUT DRAWING

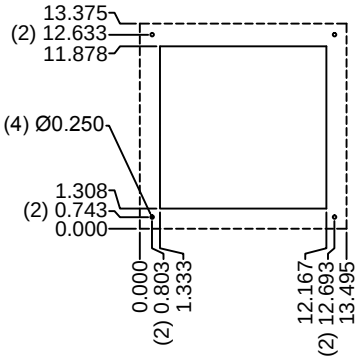

TWO CUTOUTS
REQUIRED
(1) INTAKE
(1) EXHAUST

IQ800FP-H
GASKET
INTAKE

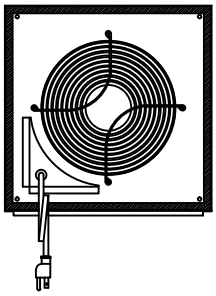

IQ800FP-H
GASKET
EXHAUST

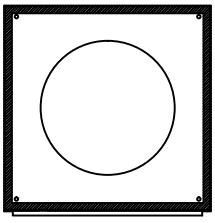

REV	DESCRIPTION	DATE	CHECKED
1	REDRAWN	6-26-16	JGG
0	INITIAL RELEASE	1-22-08	JMH

REVISIONS

PROPRIETARY DRAWING
THIS DRAWING IS THE PROPERTY OF ICE QUBE, INC. AND IS NOT TO BE DUPLICATED OR ALTERED WITHOUT AUTHORIZATION OF ICE QUBE, INC.

DRAWN: JMH
SCALE: NONE
DATE: 1-22-08
SHEET 1 OF 1

ICEqube
INDUSTRIAL COOLING EQUIPMENT
141 WILSON AVENUE
GREENSBURG, PA 15601
724-837-2204 * 1-888-867-6234
FAX 724-837-3986

PART NAME: IQ800FP-H
DWG NO: IQ290331
REV: 1