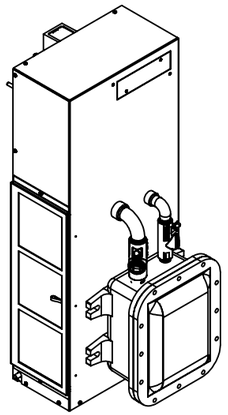

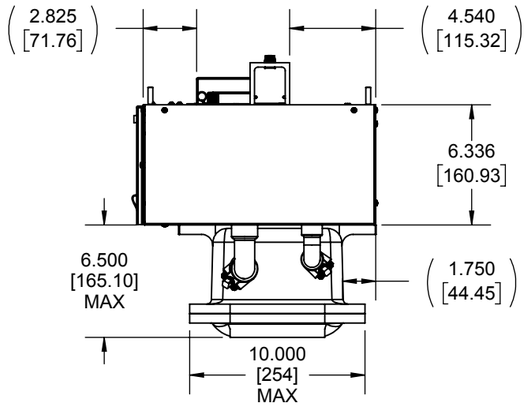

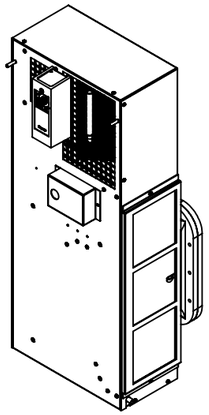

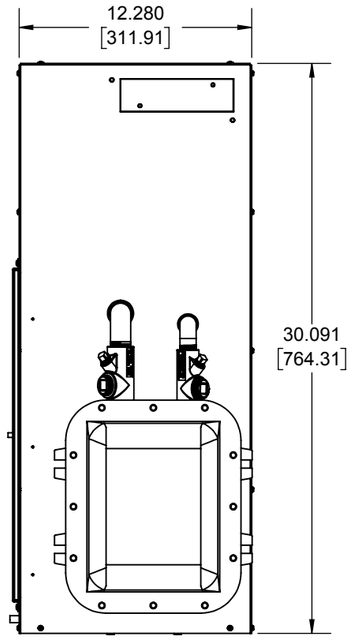

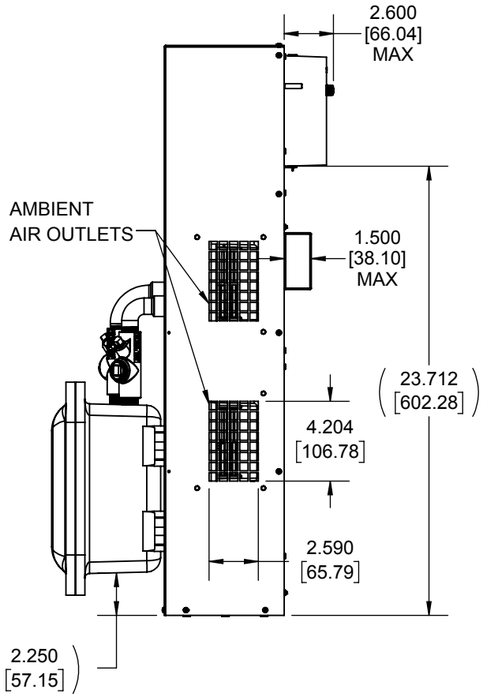

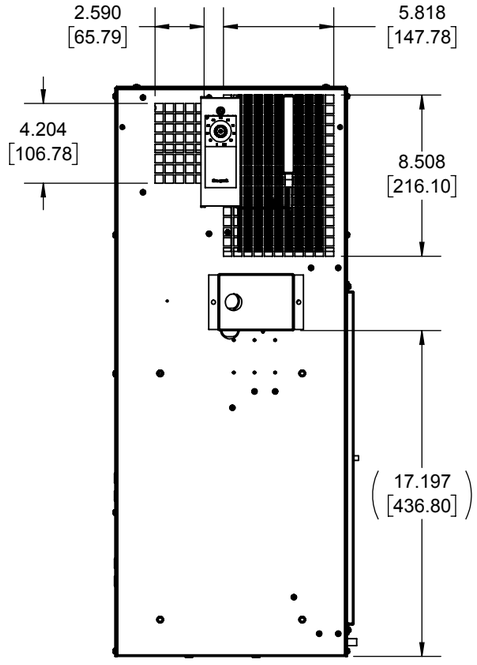

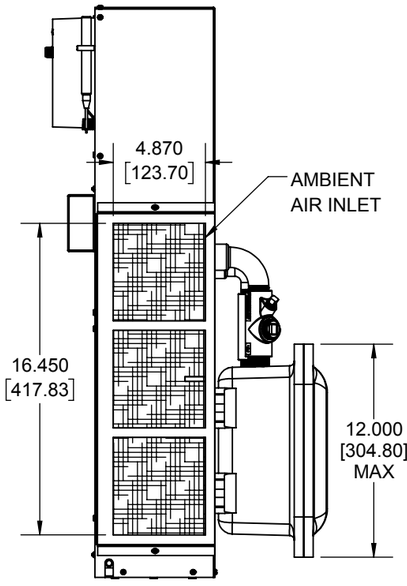

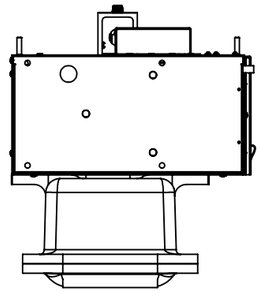

IQ3000VS
COOLING CAPACITY: 3000 BTUH (880W) @131°F (55°C)
MAXIMUM AMPS: 6.9 (828W) @120V/60HZ
MAXIMUM AMPS: 3.4 (782W) @230V/60HZ
MAXIMUM OPERATING TEMP: 131°F (55°C)
DIMENSIONS: 30.09" (764MM) H X 12.28" (312MM) W X 6.34" (161MM) D
WEIGHT: 75 LBS (34.1KG)

REV	REVISION	CHG	DATE	APP	DATE	CN #
B	ADDED WATTAGE INFO	RCC	1/2/2018			
A	REDRAWN IN SW	RCC	4/10/2017			

ITEM NUMBER: N/A
MATERIAL: N/A
EST WT: lbs
USED ON: IQ3000VS
DRAWN BY: RCC
DATE: 4/10/2017
SCALE: 1:8

UNLESS OTHERWISE SPECIFIED TOLERANCES
.X ±.060
.XX ±.030
.XXX ±.015
FRACTIONAL ±1/16
ANGULAR ±1/2°
SURFACE FINSH 63
DO NOT SCALE DRAWING DIMENSIONS ARE INCHES

ICE QUBE, INC.
THIS IS A PROPRIETARY DOCUMENT. DO NOT REPRODUCE OR DISCLOSE WITHOUT THE EXPRESS WRITTEN PERMISSION OF ICE QUBE, INC.
DESCRIPTION: IQ3000VS SPEC DRAWING XP2
DRAWING NUMBER: IQ351422
REV: B

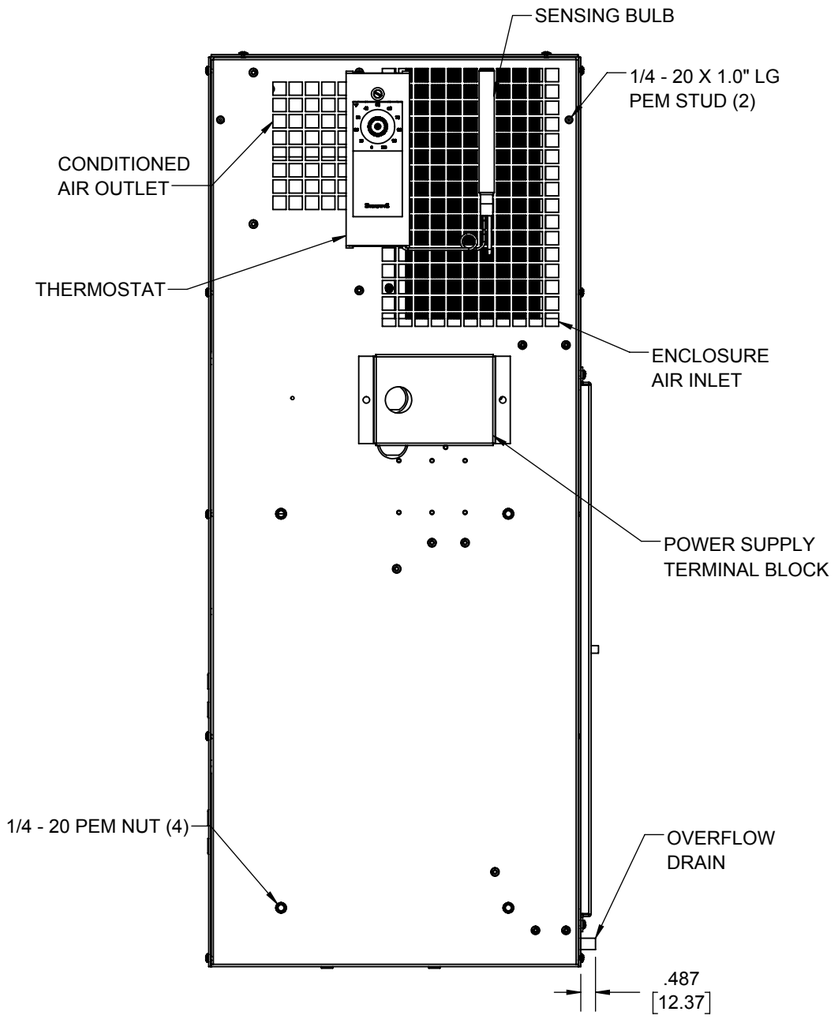

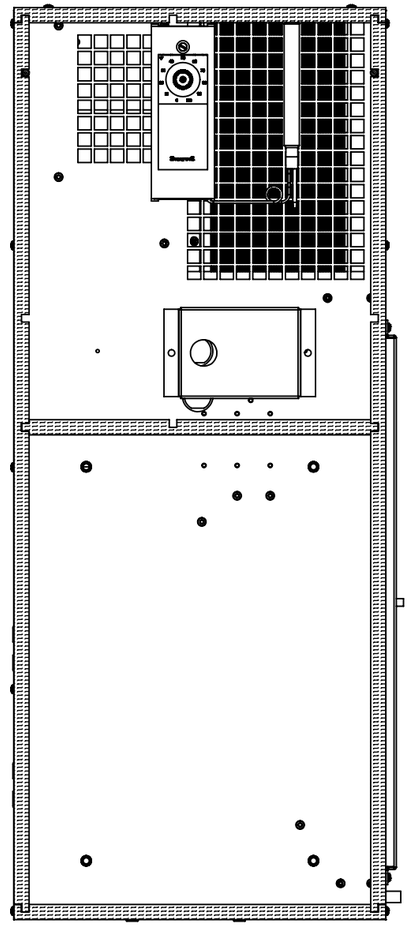

IMPORTANT
GASKET MUST BE
APPLIED AS SHOWN
FOR PROPER OPERATION
AND TO MAINTAIN
NEMA INTEGRITY.

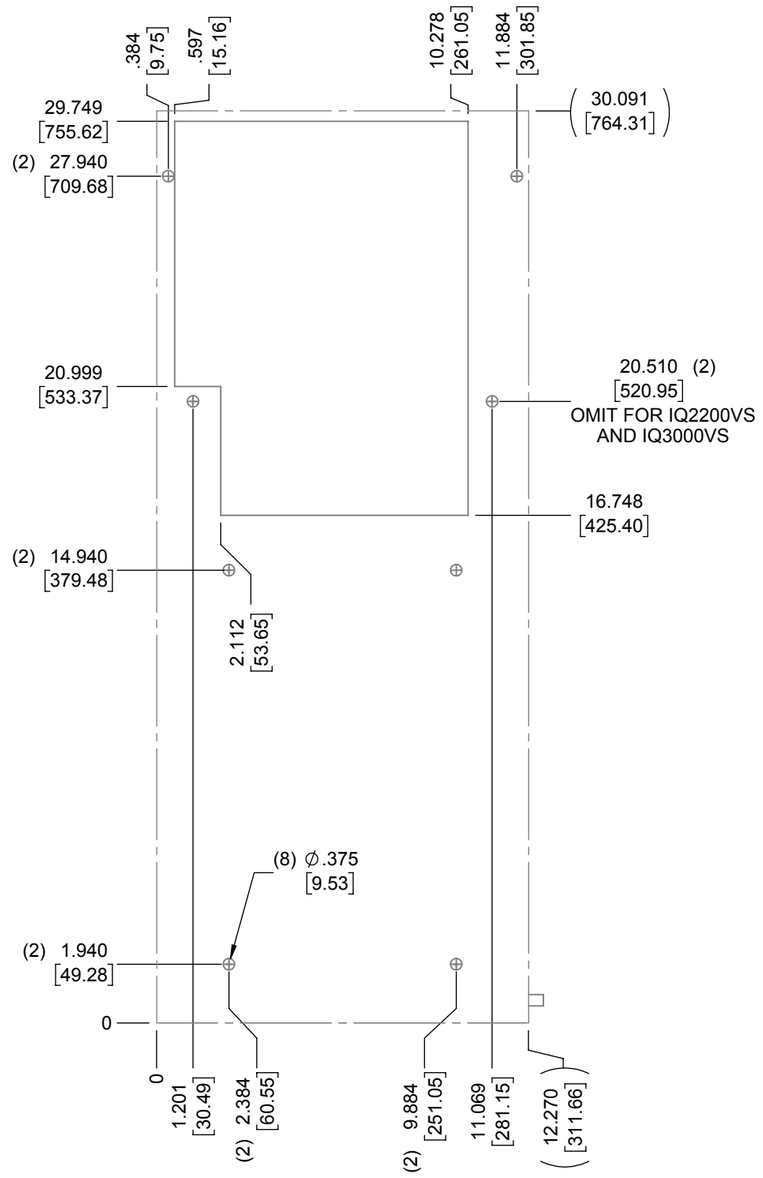

ITEM NUMBER *N/A*		USED ON *IQ3000VS*	UNLESS OTHERWISE SPECIFIED TOLERANCES .X ±.060, .XX ±.030, .XXX ±.015, FRACTIONAL ±1/4, ANGULAR ±1/2°, SURFACE FINISH 63	ICE QUBE, INC. THIS IS A PROPRIETARY DOCUMENT. DO NOT REPRODUCE OR DISCLOSE WITHOUT THE EXPRESS WRITTEN PERMISSION OF ICE QUBE, INC.	
MATERIAL *N/A*				DESCRIPTION *IQ3000VS SPEC DRAWING XP2*	
EST WT: lbs				DRAWING NUMBER *IQ351422*	REV *B*
DRAWN BY *RCC*	DATE *4/10/2017*	SCALE *1:5*	DO NOT SCALE DRAWING DIMENSIONS ARE INCHES		