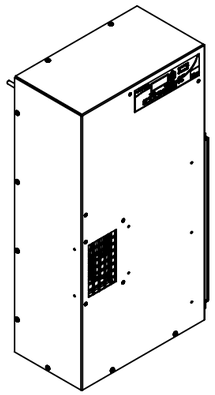

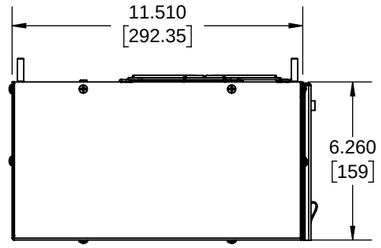

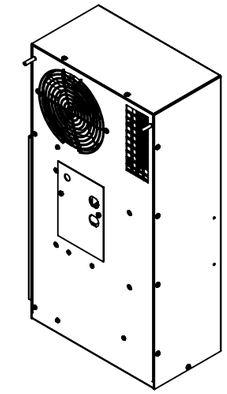

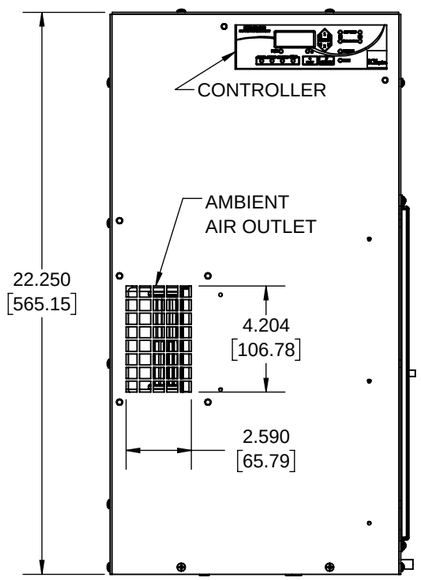

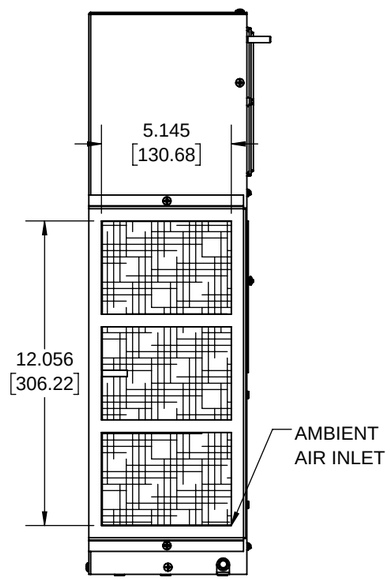

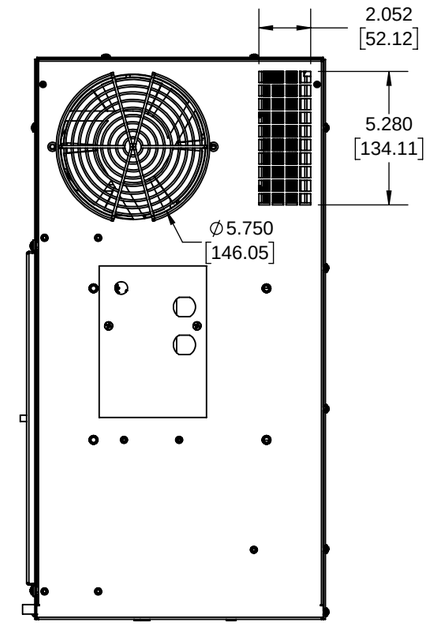

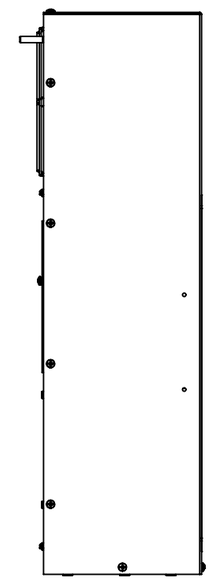

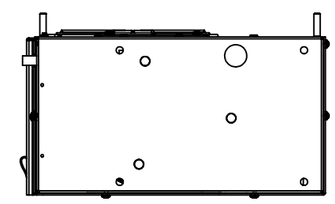

IQ1800VS
COOLING CAPACITY: 1800 BTUH (528W) @131°F (55°C)
MAXIMUM AMPS: 4.0 (480W) @120V/60HZ
MAXIMUM AMPS: 2.0 (460W) @230V/60HZ
MAXIMUM OPERATING TEMP: 131°F (55°C)
MINIMUM OPERATING TEMP: -40°F (-40°C)
DIMENSIONS: 22.25" (565MM) H X 11.51" (292MM) W X 6.26" (159MM) D
WEIGHT: 47 LBS (21.4KG)

REV	REVISION	CHG	DATE	APP	DATE	CN #
D	UPDATED CUTOUT	SRZ	4/10/2020			ECN-1429
C	ADDED CFM, dBA, AND CLEARANCE INFO	RCC	3/26/2018			1351
B	ADDED WATTAGE INFO	RCC	12/29/2017			
A	REDRAWN IN SW	RCC	4/6/2017			

ITEM NUMBER: N/A
MATERIAL: N/A
EST WT: lbs
USED ON: IQ1800VS
DRAWN BY: RCC
DATE: 04/06/2017
SCALE: 1:6

UNLESS OTHERWISE SPECIFIED TOLERANCES
.X ±.060
.XX ±.030
.XXX ±.015
FRACTIONAL ±1/16
ANGULAR ±1/2°
SURFACE FINSH 63
DO NOT SCALE DRAWING
DIMENSIONS ARE INCHES

ICE QUBE, INC.

THIS IS A PROPRIETARY DOCUMENT. DO NOT REPRODUCE OR DISCLOSE WITHOUT THE EXPRESS WRITTEN PERMISSION OF ICE QUBE, INC.

DESCRIPTION: IQ1800VS SPEC DRAWING
DRAWING NUMBER: IQ351401
REV: D

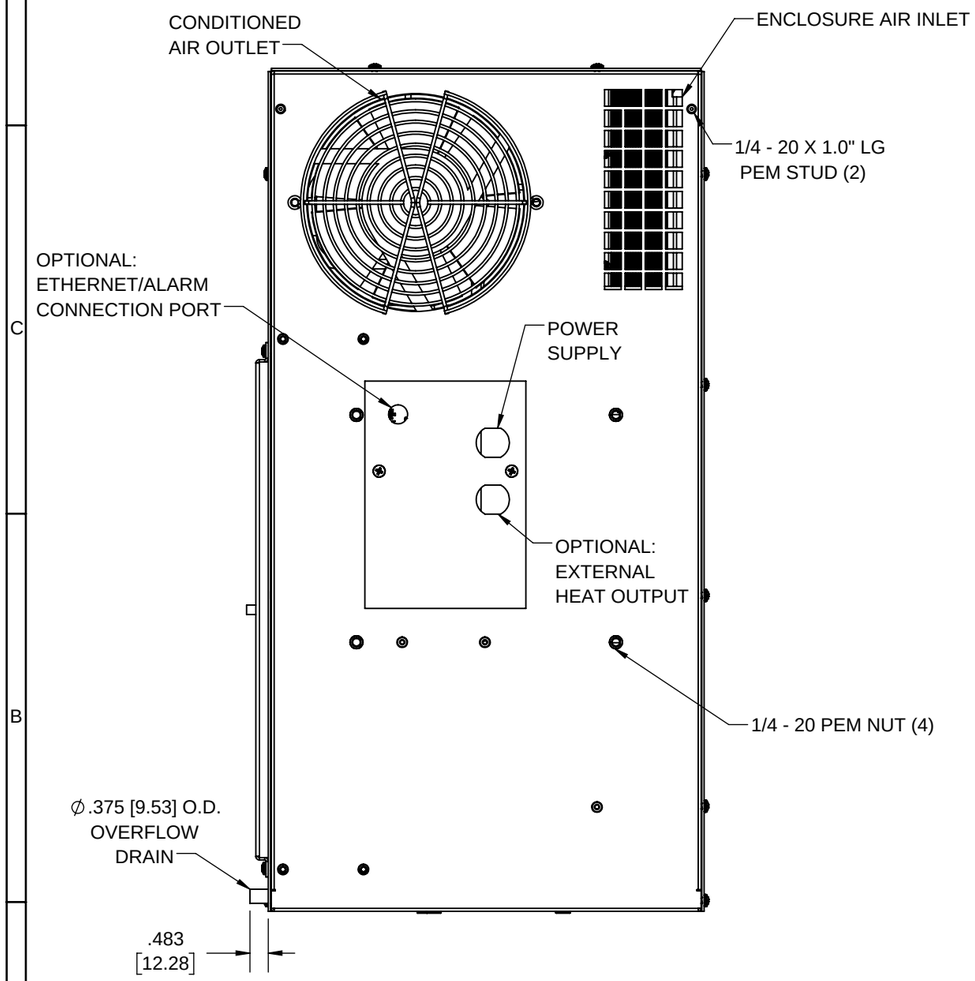

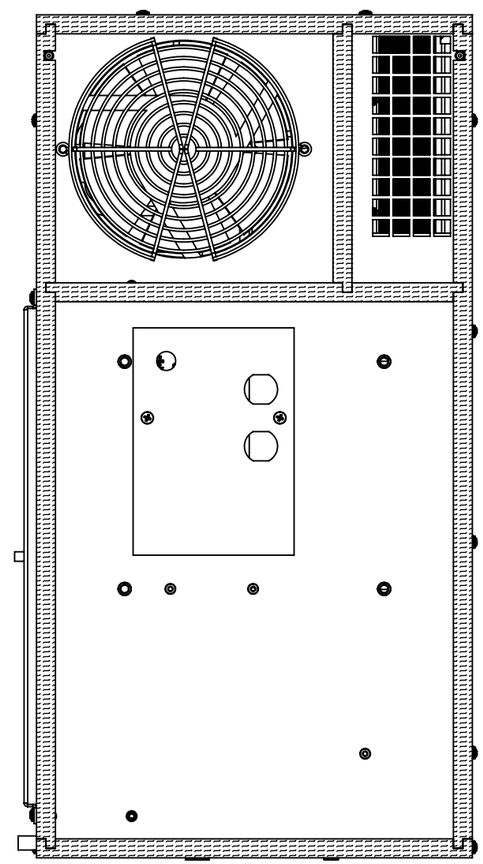

IMPORTANT
GASKET MUST BE
APPLIED AS SHOWN
FOR PROPER OPERATION
AND TO MAINTAIN
NEMA INTEGRITY.

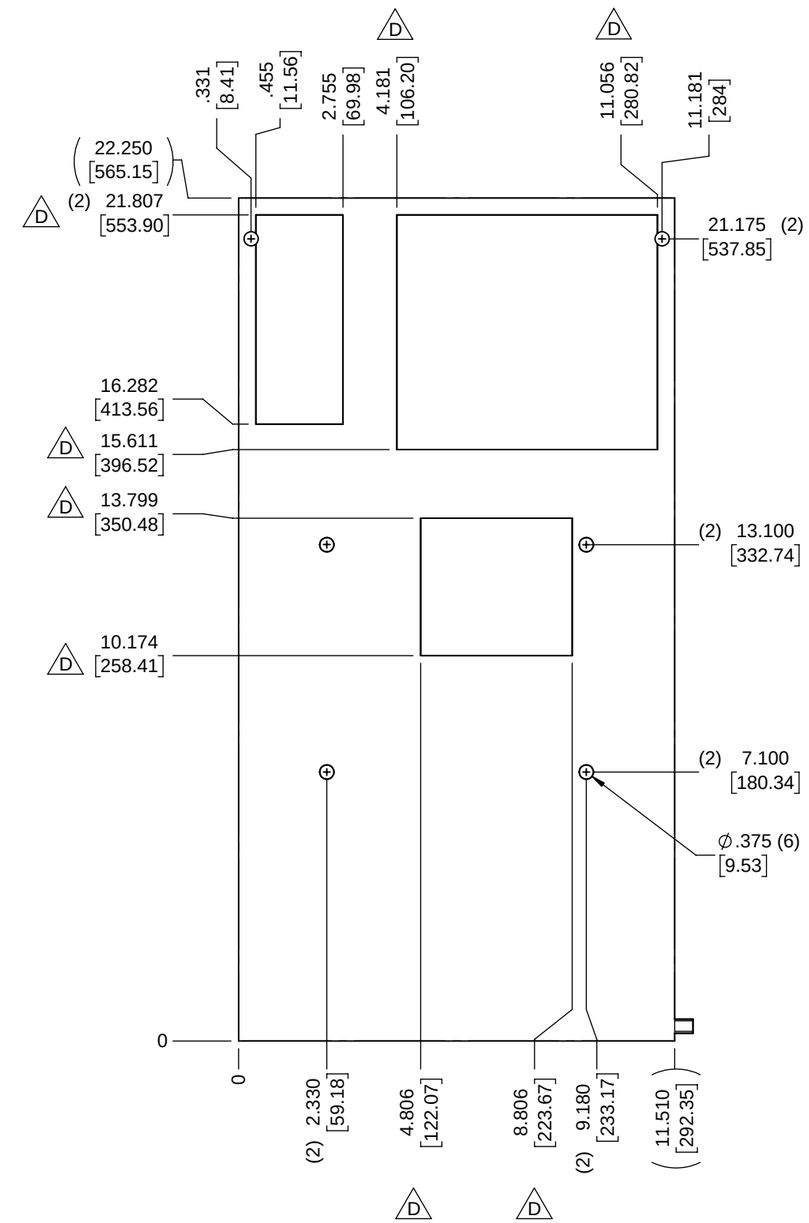

EVAP. OUTLET å 190 CFM
COND. OUTLET å 158 CFM
SOUND LEVEL @5FT FROM UNIT @ A HT. OF 3FT = 60 dBA
SOUND LEVEL @2FT FROM UNIT @ A HT. OF 5FT = 61 dBA
CONDENSER INLET MIN. CLEARANCE 2.08"

ITEM NUMBER N/A	USED ON IQ1800VS	UNLESS OTHERWISE SPECIFIED TOLERANCES .X ±.060 .XX ±.030 .XXX ±.015 FRACTIONAL ±1/4 ANGULAR ±1/2° SURFACE FINSH 63 DO NOT SCALE DRAWING DIMENSIONS ARE INCHES	ICE QUBE, INC. THIS IS A PROPRIETARY DOCUMENT. DO NOT REPRODUCE OR DISCLOSE WITHOUT THE EXPRESS WRITTEN PERMISSION OF ICE QUBE, INC.
MATERIAL N/A			DESCRIPTION IQ1800VS SPEC DRAWING
EST WT: lbs			DRAWING NUMBER IQ351401 REV D
DRAWN BY RCC	DATE 04/06/2017	SCALE 1:4	

QD-ENG-59 REV 0

SHEET 2 of 2